ELLIS

Holding Power

Emperor Data Sheet (Trefoil)

UK Patent GB 233 9237

Emperor Cable Cleats are available for trefoil and single cable applications where the highest levels of short circuit withstand are required. The unique patented design allows rapid installation. The frame, manufactured from 316L stainless steel , offers the ultimate protection against the harshest environmental conditions. The frame is tightened and locked using a combination of M12 Set Screw, Nyloc Nut and washer in A4 Stainless Steel , Screw head Retainer in 'Zero-Halogen, Low Smoke & Fume' (LSF) Nylon (MDS02 Data Sheet)* and Emperor LSF Polymeric Washer (MDS01 Data Sheet)*. To protect and cushion the cables during short circuit conditions, the cleat is supplied with an integral LSF Polymeric liner and base pads (MDS01 Data Sheet)*.

Recommended fixing methods include using either two 10mm bolts or a single 12mm bolt (available as extras), although other bolt sizes can be accommodated.

* Material Data Sheets MDS01 & MDS02 are available upon request.

Emperor Cable Cleat (Trefoil)

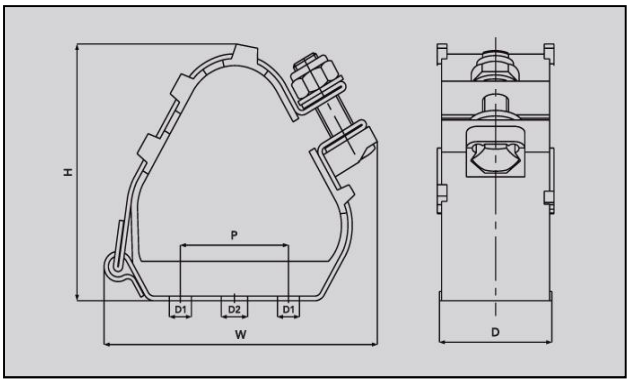

Selection table for Trefoil Cable Application.

Part No.	Cable Range		Dimensions					Weight g
	Min Dia mm	Max Dia. mm	W mm	H mm	D mm	P mm	Fixing Holes	
ER19-23	19	23	96	83	54	25	2 x M10 + 1 x M12	425
ER23-28	23	28	96	83	54	25	2 x M10 + 1 x M12	425
ER27-32	27	32	97	88	54	25	2 x M10 + 1 x M12	440
ER30-35	30	35	99	91	54	25	2 x M10 + 1 x M12	445
ER33-38	33	38	103	95	54	25	2 x M10 + 1 x M12	460
ER36-42	36	42	124	100	54	50	2 x M10 + 1 x M12	600
ER40-46	40	46	125	106	54	50	2 x M10 + 1 x M12	605
ER44-50	44	50	130	117	54	50	2 x M10 + 1 x M12	630
ER48-55	48	55	132	121	54	50	2 x M10 + 1 x M12	640
ER51-58	51	58	136	128	54	50	2 x M10 + 1 x M12	650
ER55-62	55	62	160	135	54	75	2 x M10 + 1 x M12	810
ER59-66	59	66	163	143	54	75	2 x M10 + 1 x M12	825
ER63-70	63	70	166	151	54	75	2 x M10 + 1 x M12	850
ER67-74	67	74	169	158	54	75	2 x M10 + 1 x M12	850
ER71-78	71	78	172	165	54	75	2 x M10 + 1 x M12	890
ER74-82	74	82	177	171	54	75	2 x M10 + 1 x M12	890

Ellis Patents Ltd
High Street, Rillington, Malton,
North Yorkshire YO17 8LA
United Kingdom

T. +44 (0)1944 758395
F. +44 (0)1944 758808
sales@ellispatents.co.uk
www.ellispatents.co.uk

Part No.	Cable Range		Dimensions					Weight g
	Min Dia mm	Max Dia. mm	W mm	H mm	D mm	P mm	Fixing Holes	
ER77-85	77	85	183	177	54	75	2 x M10 + 1 x M12	905
ER82-88	82	88	191	187	54	75	2 x M10 + 1 x M12	805
ER88-96	88	96	207	203	54	75	2 x M10 + 1 x M12	850
ER96-103	96	103	221	218	54	75	2 x M10 + 1 x M12	940
ER103-111	103	111	237	235	54	75	2 x M10 + 1 x M12	950
ER111-119	111	119	253	250	54	75	2 x M10 + 1 x M12	1010
ER119-128	119	128	265	275	54	75	2 x M10 + 1 x M12	1220

Testing Information

Emperor Cleats have been tested in line with the International Standard of 'Cable Cleats for Electrical Installations' IEC 61914:2009. Typical results are detailed below:

Properties	IEC 61914:2009 Classification Clause	Units / Classification	Emperor Trefoil Cable Application Test Data
Cleat Type	6.1, 6.1.3	Composite	-
Impact Resistance	6.3, 6.3.5, 9.2	Very Heavy Classification (5kg @ 400mm)	Pass
Resistance to Electromechanical Force (undertaken at Damstra Laboratories NL)	6.4, 6.4.3, 9.5	kA @ 300mm Centres M10 Fixings (withstanding one short circuit)	195 (Report No. PDL-09.098.2)
Resistance to Electromechanical Force (undertaken at Damstra Laboratories NL)	6.4, 6.4.4, 9.5	kA @ 600mm Centres M10 Fixings (withstanding more than one short circuit)	156 (Report No. PDL08.074.1)
Temperature for Permanent Application	6.2	ºC	-40 to 60
Needle Flame Test	10.0, 10.1	Application Time (seconds)	>120
Lateral Load Test	9.3	Newtons (N)	Refer to Ellis Patents for further details.
Axial Movement Test	9.4	Newtons (N)	650

Emperor Cable Cleats are compliant with the requirements of London Underground Standard 1-085. Product Register No. 362

Ellis Patents Ltd
High Street, Rillington, Malton,
North Yorkshire YO17 8LA
United Kingdom

T. +44 (0)1944 758395
F. +44 (0)1944 758808
sales@ellispatents.co.uk
www.ellispatents.co.uk